Regulatory Program of Radiation Sources in Industrial Use

2019.6.11

한국원자력안전기술원
KINS KOREA INSTITUTE OF NUCLEAR SAFETY

CONTENTS

I DEFINITIONS

II RADIATION SOURCES IN INDUSTRIES

III OVERVIEW OF LICENSING PROCESS

IV RADIATION SAFETY MANAGEMENT

I. DEFINITION

RADIATION

NUCLEAR SAFETY ACT ARTICLE 2.7

ELECTROMAGNETIC WAVES OR PARTICLE BEAMS WHICH ARE CAPABLE OF DIRECT OR INDIRECT IONIZATION OF AIR

PRESIDENTIAL DECREE ARTICLE 6

- ALPHA, BETA, GAMMA, X-RAY
- PROTON, HEAVY PROTON, HEAVY CHARGED PARTICLES
- NEUTRON
- ELECTRON WITH ENERGY OVER 50 keV

RADIATION

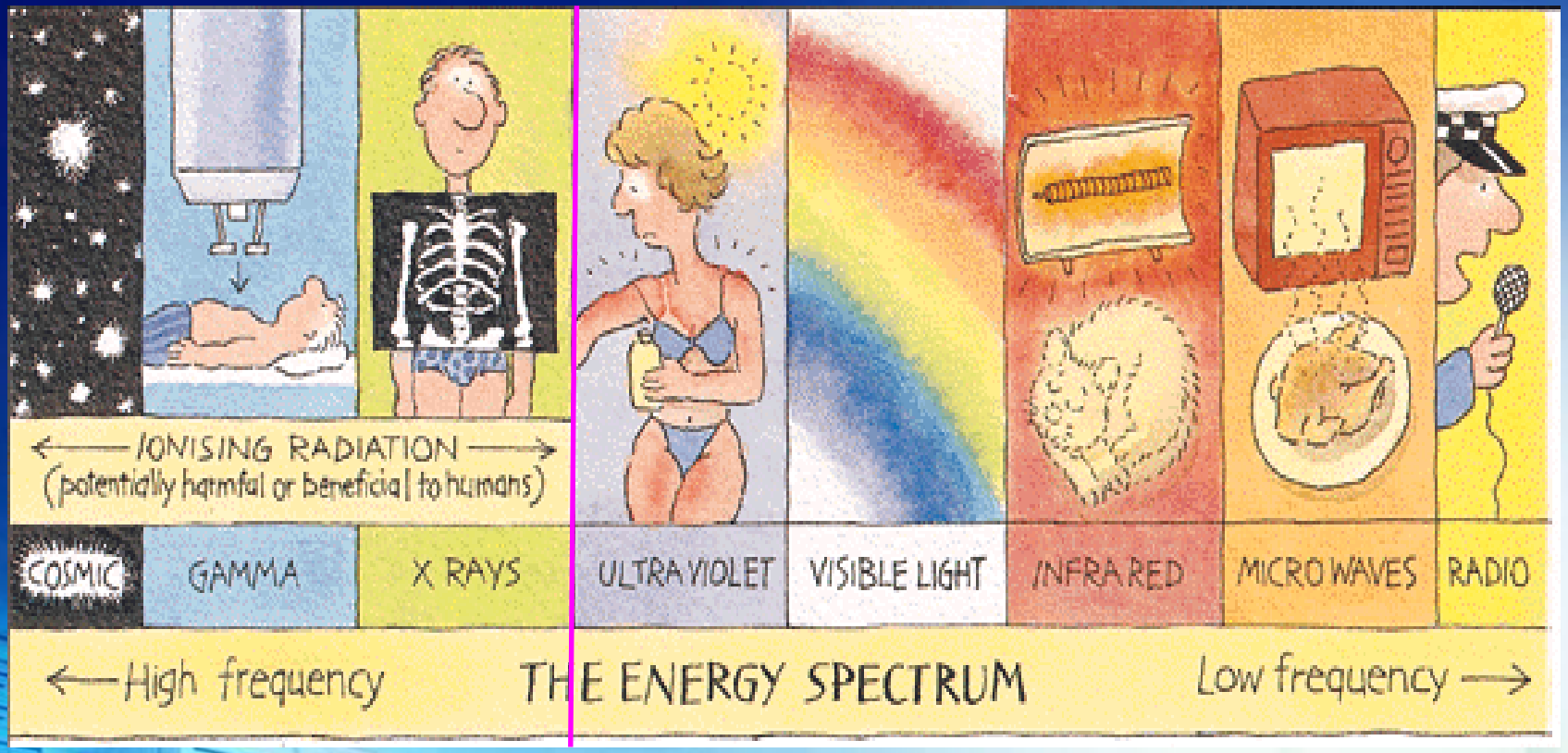

※ ENERGY (E) = FREQUENCY (**v**) X PLANCK'S CONSTANT (h)

RADIOISOTOPE

NUCLEAR SAFETY ACT ARTICLE 2.6

ISOTOPES OR THEIR COMPOUNDS WHICH EMIT RADIATION

PRESIDENTIAL DECREE ARTICLE 5

▷ EXCEEDING EXEMPTION LEVEL(ACTIVITY&CONCENTRATION) SPECIFIED IN NSSC NOTICE NO.2017-36 TABLE 5
※IAEA BASIC SAFETY STANDARD SCHEDULE I ⇒TABLE 5

▷ THE FOLLOWINGS ARE NOT INCLUDED IN RADIOISOTOPES
- NUCLEAR FUEL & SOURCE MATERIAL
- RADIOACTIVE MATERIAL OR EQUIPMENT CONTAINING THEM SPECIFIED IN NSSC NOTICE NO.2017-41

[별표 5]

핵종별 규제면제 관련 수량 및 농도

(제9조부터 제12조까지의 규정 관련)

원자번호 제1란	핵종 제2란	최소수량 (Bq) 제3란	최소농도 (Bq/g) 제4란	원자번호 제1란	핵종 제2란	최소수량 (Bq) 제3란	최소농도 번호 (Bq/g) 제4란
1	H-3	1×10^9	1×10^6	25	Mn-54	1×10^6	1×10^1
4	Be-7	1×10^7	1×10^3	25	Mn-56	1×10^5	1×10^1
6	C-14	1×10^7	1×10^4	26	Fe-52	1×10^6	1×10^1
8	O-15	1×10^9	1×10^2	26	Fe-55	1×10^6	1×10^4
9	F-18	1×10^6	1×10^1	26	Fe-59	1×10^6	1×10^1
11	Na-22	1×10^6	1×10^1	27	Co-55	1×10^6	1×10^1
11	Na-24	1×10^5	1×10^1	27	Co-56	1×10^5	1×10^1
14	Si-31	1×10^6	1×10^3	27	Co-57	1×10^6	1×10^2
15	P-32	1×10^5	1×10^3	27	Co-58	1×10^6	1×10^1
15	P-33	1×10^8	1×10^5	27	Co-58m	1×10^7	1×10^4
16	S-35	1×10^8	1×10^5	27	Co-60	1×10^5	1×10^1
17	Cl-36	1×10^6	1×10^4	27	Co-60m	1×10^6	1×10^3
17	Cl-38	1×10^5	1×10^1	27	Co-61	1×10^6	1×10^2
18	Ar-37	1×10^8	1×10^6	27	Co-62m	1×10^5	1×10^1
18	Ar-41	1×10^9	1×10^2	28	Ni-59	1×10^8	1×10^4
19	K-40	1×10^6	1×10^2	28	Ni-63	1×10^8	1×10^5
19	K-42	1×10^6	1×10^2	28	Ni-65	1×10^6	1×10^1
19	K-43	1×10^6	1×10^1	29	Cu-64	1×10^6	1×10^2
20	Ca-45	1×10^7	1×10^4	30	Zn-65	1×10^6	1×10^1
20	Ca-47	1×10^6	1×10^1	30	Zn-69	1×10^6	1×10^4
21	Sc-46	1×10^6	1×10^1	30	Zn-69m	1×10^6	1×10^2
21	Sc-47	1×10^6	1×10^2	31	Ga-72	1×10^5	1×10^1
21	Sc-48	1×10^5	1×10^1	32	Ge-71	1×10^8	1×10^4
23	V-48	1×10^5	1×10^1	33	As-73	1×10^7	1×10^3
24	Cr-51	1×10^7	1×10^3	33	As-74	1×10^6	1×10^1

TABLE I.1. LEVELS FOR EXEMPTION OF MODERATE AMOUNTS OF MATERIAL WITHOUT FURTHER CONSIDERATION: EXEMPT ACTIVITY CONCENTRATIONS AND EXEMPT ACTIVITIES OF RADIONUCLIDES

Radionuclide[a]	Activity concentration (Bq/g)	Activity (Bq)	Radionuclide[a]	Activity concentration (Bq/g)	Activity (Bq)
H-3	1×10^6	1×10^9	Sc-45	1×10^2	1×10^7
Be-7	1×10^3	1×10^7	Sc-46	1×10^1	1×10^6
Be-10	1×10^4	1×10^6	Sc-47	1×10^2	1×10^6
C-11	1×10^1	1×10^6	Sc-48	1×10^1	1×10^5
C-14	1×10^4	1×10^7	Sc-49	1×10^3	1×10^5
N-13	1×10^2	1×10^9	Ti-44	1×10^1	1×10^5
Ne-19	1×10^2	1×10^9	Ti-45	1×10^1	1×10^6
O-15	1×10^2	1×10^9	V-47	1×10^1	1×10^5
F-18	1×10^1	1×10^6	V-48	1×10^1	1×10^5
Na-22	1×10^1	1×10^6	V-49	1×10^4	1×10^7
Na-24	1×10^1	1×10^5	Cr-48	1×10^2	1×10^6
Mg-28	1×10^1	1×10^5	Cr-49	1×10^1	1×10^6
Al-26	1×10^1	1×10^5	Cr-51	1×10^3	1×10^7
Si-31	1×10^3	1×10^6	Mn-51	1×10^1	1×10^5
Si-32	1×10^3	1×10^6	Mn-52	1×10^1	1×10^5
P-32	1×10^3	1×10^5	Mn-52m	1×10^1	1×10^5
P-33	1×10^5	1×10^8	Mn-53	1×10^4	1×10^9
S-35	1×10^5	1×10^8	Mn-54	1×10^1	1×10^6
Cl-36	1×10^4	1×10^6	Mn-56	1×10^1	1×10^5
Cl-38	1×10^1	1×10^5	Fe-52	1×10^1	1×10^6
Cl-39	1×10^1	1×10^5	Fe-55	1×10^4	1×10^6
Ar-37	1×10^6	1×10^8	Fe-59	1×10^1	1×10^6
Ar-39	1×10^7	1×10^4	Fe-60	1×10^2	1×10^5
Ar-41	1×10^2	1×10^9	Co-55	1×10^1	1×10^6
K-40	1×10^2	1×10^6	Co-56	1×10^1	1×10^5
K-42	1×10^2	1×10^6	Co-57	1×10^2	1×10^6
K-43	1×10^1	1×10^6	Co-58	1×10^1	1×10^6
K-44	1×10^1	1×10^5	Co-58m	1×10^4	1×10^7
K-45	1×10^1	1×10^5	Co-60	1×10^1	1×10^5
Ca-41	1×10^5	1×10^7	Co-60m	1×10^3	1×10^6
Ca-45	1×10^4	1×10^7	Co-61	1×10^2	1×10^6
Ca-47	1×10^1	1×10^6	Co-62m	1×10^1	1×10^5
Sc-43	1×10^1	1×10^6	Ni-56	1×10^1	1×10^6
Sc-44	1×10^1	1×10^5	Ni-57	1×10^1	1×10^6

RADIATION GENERATING DEVICE

NUCLEAR SAFETY ACT ARTICLE 2.9

EQUIPMENTS WHICH GENERATE RADIATION BY MEANS OF ACCELERATING CHARGED PARTICLES

PRESIDENTIAL DECREE ARTICLE 8

- X-RAY GENERATING DEVICE, LINEAR ACCELERATOR
- CYCLOTRON, SYNCHROTRON, BETATRON, MICROTRON
- VAN DE GRAFF, COCKROFT-WALTON, TRANSFORMER-TYPED ACCELERATOR
- ION IMPLANTER
- NUCLEAR FUSION EXPERIMENTAL EQUIPMENT (SPECIFIED IN NSSC NOTICE NO.2017-37)

RADIATION GENERATING DEVICE

EXEMPTION(NSSC NOTICE 2017.42)

- ▷ RADIATION GENERATING DEVICES EMITTING RADIATION WITH ENERGY ONLY BELOW 5 keV
- ▷ RADIATION GENERATING DEVICES BEING USED FOR MEDICAL DIAGNOSIS
- ▷ FULL PROTECTION TYPE ACCORDING TO ARTICLE 16 OF NSSC NOTICE NO.2018-1

  ※DESIGN-APPROVED AND PASSED INSPECTION

RADIATION EQUIPMENT

NUCLEAR SAFETY ACT ARTICLE 60

RADIATION GENERATING DEVICE OR EQUIPMENT CONTAINING RADIOACTIVE SOURCE

※INCLUDING ALL PARTS AFFECTING RADIATION EMISSION
(NSSC NOTICE NO. 2018-1 ARTICLE 2-1)

NSSC NOTICE 2018-1 ARTICLE 28

- ▷ INDUSTRIAL & MEDICAL RADIOGRAPHY
- ▷ GAUGE(BETA & GAMMA, PORTABLE MOISTURE & DENSITY)
- ▷ GAMMA EXPOSURE DEVICE, SELF-LUMINOUS DEVICE
- ▷ ION GENERATOR (STATIC ELIMINATOR, CHROMATOGRAPHY, SMOKE DETECTOR), CALIBRATOR
- ▷ CONTINUOUS DETECTOR OF INFORMATION INSIDE PIPES
- ▷ TELETHERAPY, XRF, XRD, GENERAL MEDICAL DEVICE
- ▷ RADIAITON GENERATING DEVICES IN THE PRESIDENTIAL DECREE ARTICLE 8

DESIGN APPROVAL & INSPECTION

NUCLEAR SAFETY ACT ARTICLE 60

APPROVAL FOR RADIATION EQUIPMENT WHICH IS PRODUCED DOMESTICALLY OR IMPORTED FROM OTHER COUNTRIES

RADIATION EQUIPMENT SHALL BE APPROVED BEFORE DISTRIBUTION WHICH IS DOMESTICALLY MANUFACTURED OR IMPORTED

NUCLEAR SAFETY ACT ARTICLE 61

DESIGN-APPROVED EQUIPMENT SHALL BE INSPECTED WHETHER IT IS IN ACCORDANCE WITH DESIGN APPROVAL

※USERS SHALL USE ONLY THE EQUIPMENTS PASSED INSPECTION

II. RADIATION SOURCES IN INDUSTRIES

SOURCES_RADIOISOTOPES

LEVEL IN VESSEL

^{137}Cs

LEVEL IN FIRE EXTINGUISHER

^{60}Co

THICKNESS OF PRODUCTS

^{85}Kr / ^{241}Am

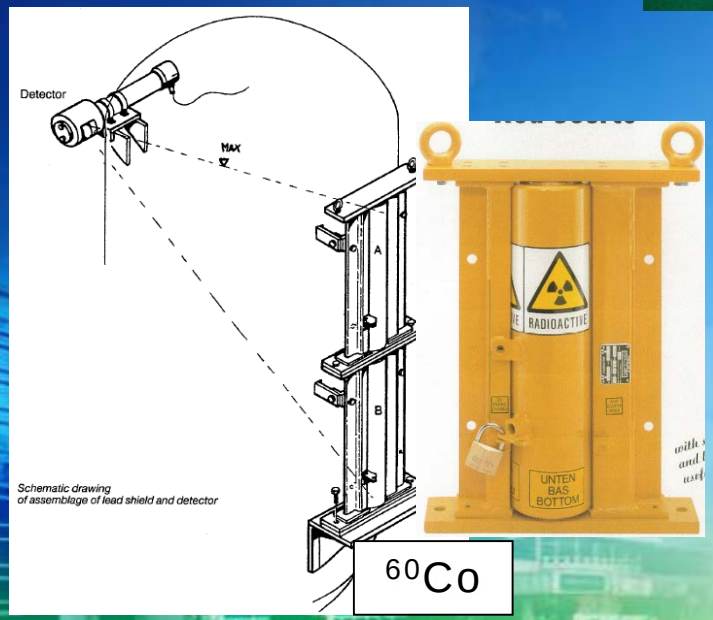

^{60}Co

GC-ECD

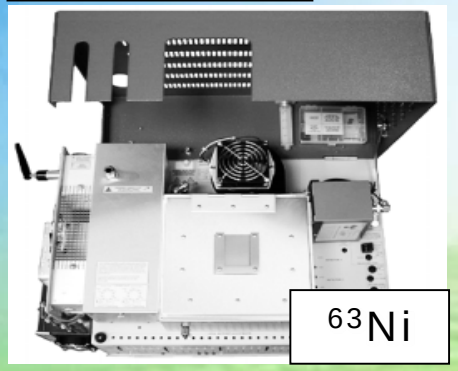

^{63}Ni

SOURCES_RADIOISOTOPES

NDT(MOBILE)

ALLOY ANALYZER(MOBILE)

STANDARD EXPOSURE(for TLD)

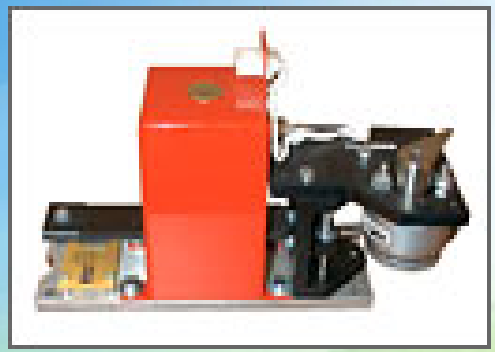

CALIBRATION

SOURCES_RADIATION GENERATORS

LEVEL IN BOTTLE/CAN

DEFECT SCAN

LUGGAGE SCAN

STATIC ELIMINATOR

SOURCES_RADIATION GENERATORS

MATERIAL ANALYSIS

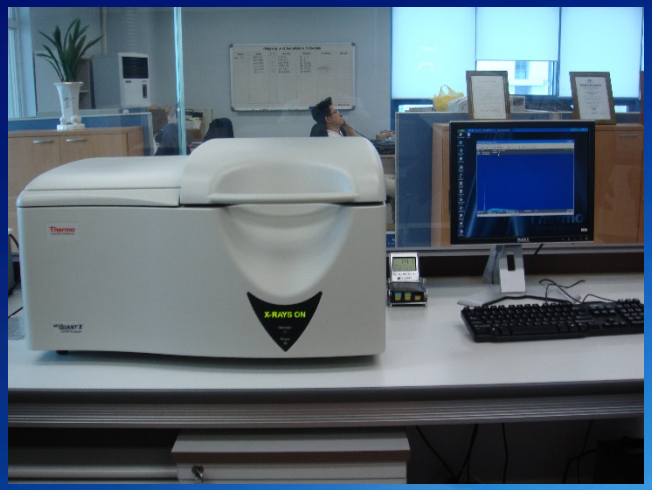

NDT(MOBILE)

ALLOY ANALYZER(MOBILE)

III. OVERVIEW OF LICENSING PROCESS

AUTHORIZATION PROCESS

APPLICATION

- RADIATION SAFETY REPORT
- SAFETY MANAGEMENT RULE
- STANDARD OF COMPENSATION
- BUSINESS LICENSE

[DOCUMENTS TO PROVE]
- EMPLOYMENT OF LICENSE HOLDER
- PURCHASE OF DETECTORS

FOR PRODUCTION	FOR SALE
SAFETY ANALYSIS REPORT	PLAN FOR ACQUIRING & SALE OF RI / RG
QA PLAN	SPEC. OF RG

SAFETY REVIEW

KINS

- DOCUMENTS ARE PROPERLY SUBMITTED?
- FACILITIES MEET TECHNICAL REQUIREMENTS? (SHIELDING, SAFETY SYSTEM, ETC.)
- HANDLING OF SOURCES MEETS TECHNICAL REQUIREMENTS? (USE, STORE, DISPOSE, DISCHARGE, ETC.)
- EXPOSURE DOSE IS PROPERLY EVALUATED?
- SAFETY MANAGEMENT IS PROPERLY PLANNED?

REPORT THE RESULT TO NSSC

CERTIFICATION

원자력안전위원회
NUCLEAR SAFETY AND SECURITY COMMISSION

REPORT REVIEW

ISSUE LICENSE TO THE APPLICANTS

INITIATION OF ACTIVITIES AFTER PASSING INSPECTION → NOTIFICATION TO NSSC

IV. RADIATION SAFETY MANAGEMENT

BASIS OF RADIATION SAFETY CONTROL

RADIATION SAFETY REPORT[13 CHAPTERS]

4. RADIATION SOURCES : CHARACTERISTICS, LOCATION, ETC.
5. SUMMARY OF SAFETY FACILITIES
6. HANDLING METHODS OF RADIATI0N SOURCES & RADIATION SAFETY MANAGEMENT PLAN
7. EVALUATION PROCEDURE, METHODOLOGY & RESULT OF THE ANTICIPATED EXPOSURE
9. THE RISK OF & COUNTERMEASURE TO THE ACCIDENTS
10. PRODUCTION OF & DISPOSAL PLAN FOR RADWASTES

BASIS OF RADIATION SAFETY CONTROL

SAFETY MANAGEMENT RULE[14 CHAPTERS]

4. MONITORING & RECORD OF DOSE RATE/CONTAMINATION
5. CONTROL OF INSTRUMENTS & ARTICLES FOR SAFETY MANAGEMENT
6. TRAINING/HEALTH CHECK/EXPOSURE CONTROL OF WORKERS
9. MEASURES TO RADIATION DAMAGES
11. MEASURES TO RISKS
10. PREVENTION OF & MEASURES TO ACCIDENTS(LOSS, ROBBERY)

CONCEPT OF RADIATION SAFETY MANAGEMENT

SOURCES

- SAFETY CONTROL
- SECURITY CONTROL
- LIFE SPAN TRACKING
- HANDLING CONTROL

FACILITIES

- SHIELDING
- SAFETY SYSTEM
- SECURITY
- MONITORING
- ENTRANCE CONTROL

EQUIPMENTS

- CALIBRATION
- OPERATION

WORKERS

- TRAINING
- HEALTH CHECK
- EXPOSURE CONTROL

- TO ACHIEVE ALARA AROUND RADIATION FIELD AREA
- TO PROTECT THE PUBLIC AGAINST UNNECESSARY EXPOSURE

THANK YOU